INSTRUCTIONS FOR
14” BANDSAW

FOR YOUR SAFETY

READ ALL INSTRUCTIONS CAREFULLY

Contennts

1. Specifications
2. User Responsibility/ Warranty
3. Assembly
3.1 Initial Assembly
3.2 Fitting the Table
3.3 Fitting the Rip Fence Guide
3.4 Fitting the Crank Handle
3.5 Assembling the Rip Fence
3.6 Fence Adjustment
3.7 Centering the Table to the Blade
3.8 Setting the Table Square to Sawblade
3.9 Adjusting the Rip Fence Guide Scale
3.10 Checking the Table forFlatness
3.11 Stability of the Bandsaw
3.12 Dust Extraction
3.13 Lower Blade Guard
3.14 Tilting the Bandsaw Table
3.15 Replacing the Bandsaw Blade
3.16 Tracking the Bandsaw Blade
3.17 Adjusting the Blade Guides
3.18 Adjusting the Cutting Height
3.19 Changing the Blade Speed
4. Operation
5. Maintance
6. Troubleshooting
7. Wiring
7.1 Wiring Instructions
7.2 Wiring Diagram
8. Part List

1. Specifications

Dimensions without stand (lxwxh)	550x750x1180mm
Weight with motor	65KG (without stand)
Table height from floor (w/o stand)	500mm
Table height from floor on workstand	1020mm
Throat width	345mm
Max. cutting height	200mm
Sawblade length	2490mm
Sawblade width	6-19mm
Sawtable tilt	0º-45º
Sawtable size	400x548mm
Sawblade speeds	440 or 900 m/min(50Hz)
Motor power	1000 W

2. User Responsibility /warranty

This appliance will perform in conformity with the description contained in the instructions provided. This machine must be checked periodically. Defective equipment (including power cable) should not be used. Parts that are broken, missing, obviously worn, distorted or contaminated, should be replaced immediately. Should such repair or replacement become necessary, it is recommended that only genuine replacement parts are used and that such repairs are carried out by qualified persons. This appliance or any of its parts should not be altered or changed from standard specifications. The user of this machine shall have the sole responsibility for any malfunction which results from improper use or unauthorized modification from standard specifications, faulty maintenance, damage or improper repair by any other than qualified person.

3. ASSEMBLY

3.1 Initial Assembly

The machine is supplied partly assembled. Prior to use, the following items have to be fitted. Bandsaw table, Rip fence guide and Crank handle.

3.2 Fitting the table

Tools Required: - 13mm Wrench

Insert the M8 x 50 coach bolt and square plastic insert (A) through the slot on the upper trunion casting (B) and, temporarily, screw on the winged nut (C) to prevent it falling out. *Fig. 1*

Fit the upper table trunion casting (B) to the underside of the bandsaw table (D) using the 4 - M8 x 16 hex head set screws (E) and washers, Ensuring that the angle tilt scale is closest to the edge of the table. *Fig. 2*

Whilst the table is in the upside down position fit the table stop screw and nut (F) as shown, this will be adjusted later. *Fig. 1*

Turn the table over and remove the winged nut (C) from the trunion coach bolt (A) making sure the end of the bolt projects down through the casting. *Fig. 3*
(Some assistance may be needed for this)

Guide the table and upper trunion on to the bandsaw lower trunion (G) and ensure the bolt (A) projecting from the upper trunion is inserted through it's corresponding hole in the lower trunion *Fig. 3*. When in position re-fit and tighten the winged nut.

Fit the plastic table insert (H) to the centre of the table with the angled bevel facing downwards. *Fig. 4*

3.3 Fitting the Rip Fence Guide

This instruction assumes that the blade is already fitted, if not, go to the section headed " Replacing the bandsaw blade".

To fit the Rip Fence Guide (J) attach it to the front edge of the table with the four winged screws and washers supplied (K). This will be adjusted later. *Fig 4*

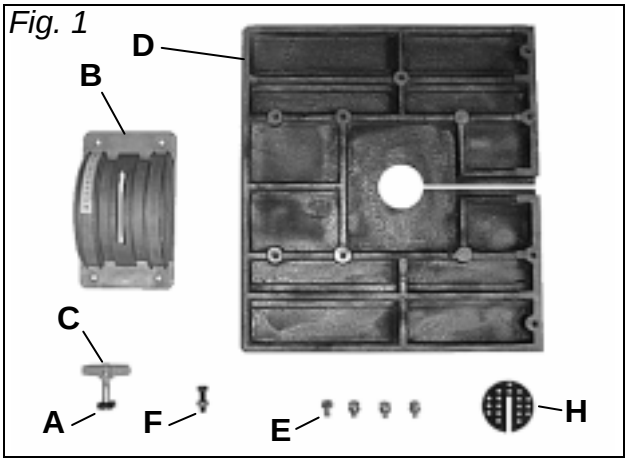

Fig. 1

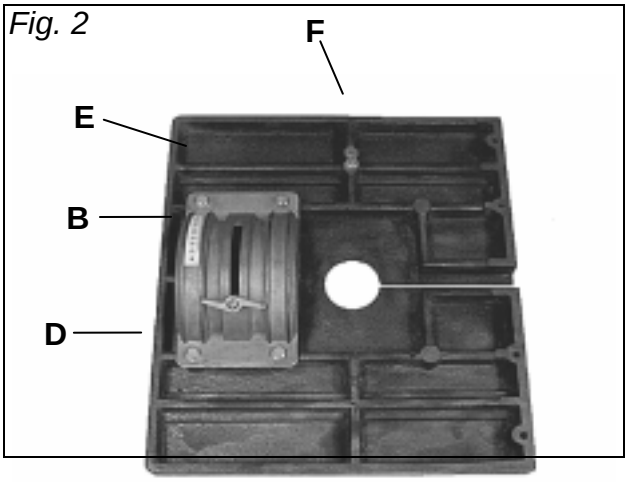

Fig. 2

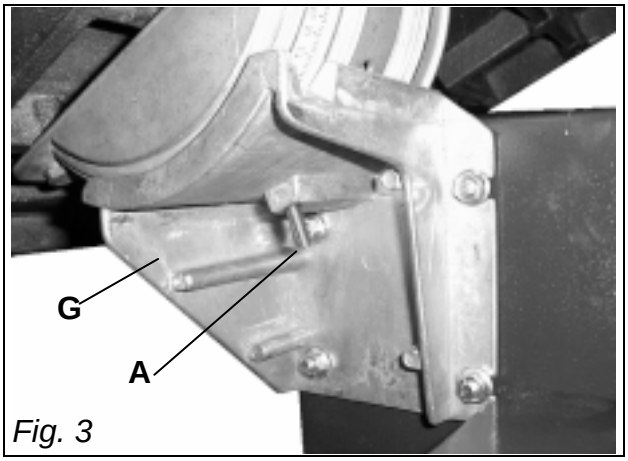

Fig. 3

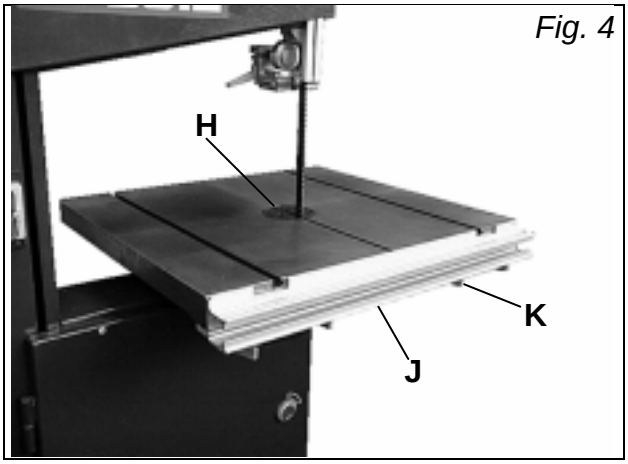

Fig. 4

3.4 Fitting the Crank Handle

Tools Required :- Flat bladed screwdriver
10mm wrench

Attach the crank handle (A) to the belt tension crank arm with the M6 x 55 slotted cheese head screw and two M6 nuts. *Fig. 5*

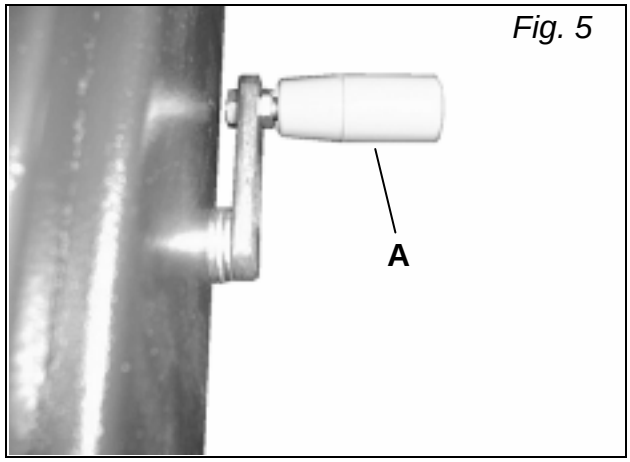

Fig. 5

3.5 Assembling the Rip Fence

The rip fence on this bandsaw can be used on either side of the blade by fixing the rip fence extrusion (C) to the appropriate side of the rip fence casting (B). *Fig. 6*

To assemble the rip fence take the rip fence casting (B) *Fig. 6* and attach it to the bandsaw table using the M8 x 50 coach bolt and plastic winged nut. (F) *Fig. 6*

Fit the rip fence extrusion (C) to the rip fence casting (B) with the two small knurled knobs and M6 x 40 coach bolts (D) and use the large knob (E) for adjustment and to lock in position as shown in
Fig. 7

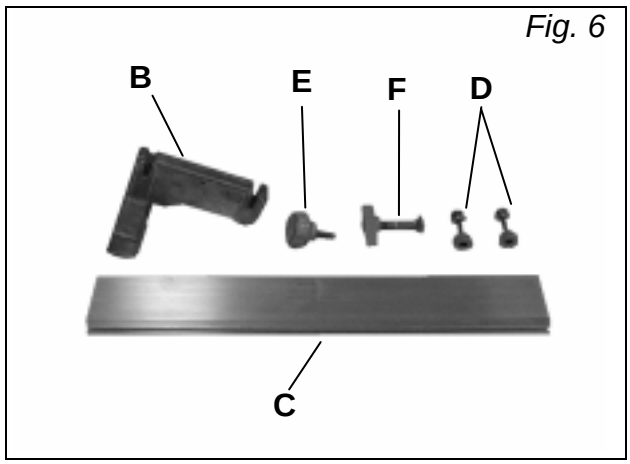

Fig. 6

3.6 Fence Adjustment

Vertical and horizontal alignment of the rip fence is made by adjusting the two small knurled knobs (D) and the large centre knob (E). *Fig. 7*

The fence should be aligned with the table slots along its length and adjusted vertically with a suitable square placed on the table surface.

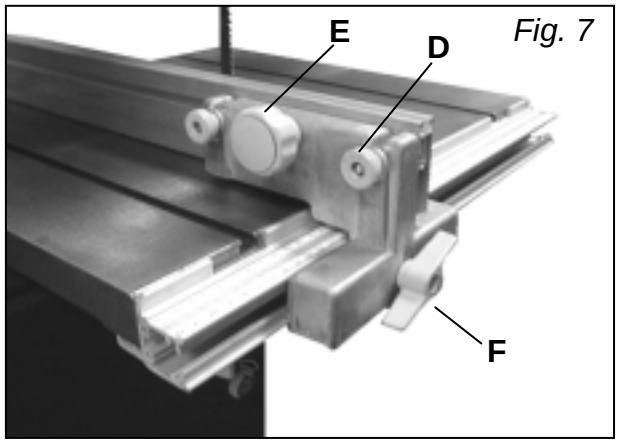

Fig. 7

3.7 Centering the table to the blade

Tools Required:- 13mm wrench

To centre the table to the blade loosen the 4 M8 nuts (G) *Fig. 8* which hold the lower trunion to the machine frame.

Slide the table sideways until the blade is at the centre of the slot in the table insert.

Re-tighten the 4 nuts making sure the table remains in its set position.

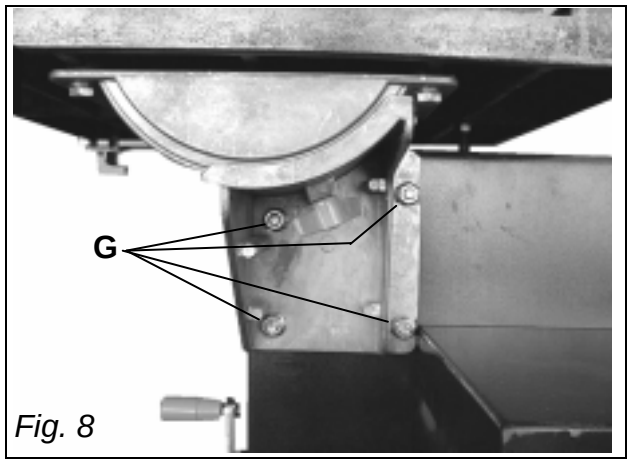

Fig. 8

3.8 Setting the table square to sawblade

Tools Required :- Small 90 º square
(*not supplied*)

The table can be set at 90º to the sawblade *Fig. 9* by adjusting the table stop screw underneath the table.

The table stop screw rests on the top of the lower wheel bandwheel housing. By, first slackening the locking nut (A) and then adjusting the screw (B) the table can be set correctly. Re-tighten the locking nut (A) making sure that the setting is maintained. *Fig. 10*

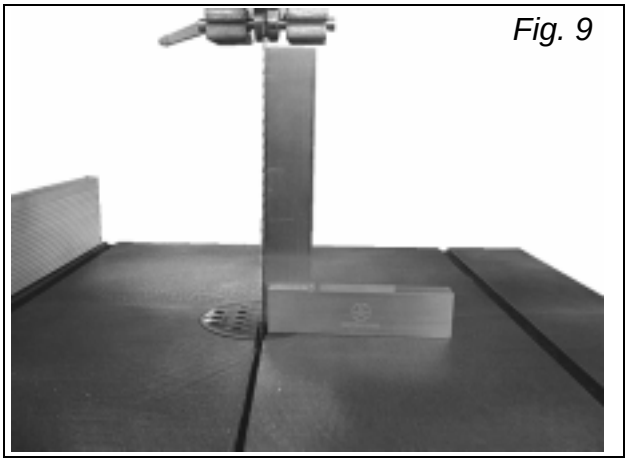

Fig. 9

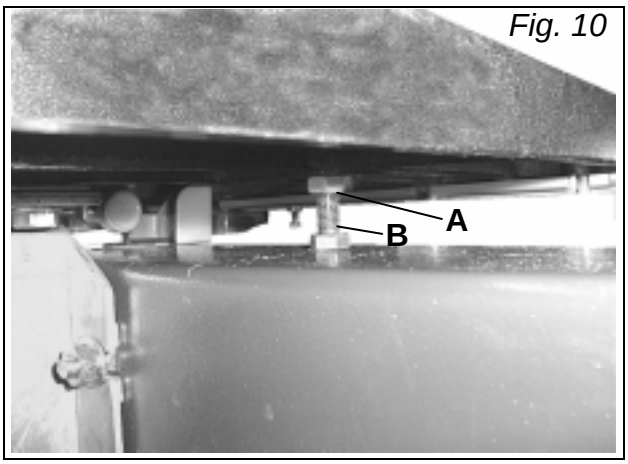

Fig. 10

3.9 Adjusting the rip fence guide scale

Tools Required:- 10mm Wrench
Straight edge

To adjust the rip fence scale loosen the four winged screws *(see K Fig. 4)* below the table and move the scale and rip fence guide (C) *Fig. 11* sideways to adjust. Re-tighten the winged screws when the adjustment is correct.

The adjustment can be checked by setting the rip fence to a thickness and cutting a test piece. When the adjustment is correct the thickness of the test piece will correspond with the rip fence scale setting.

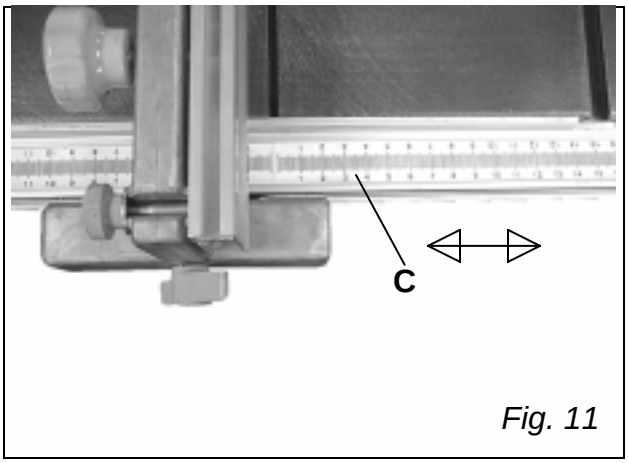

Fig. 11

3.10 Checking the table for flatness

Once the scale is set to the desired position the table should be checked for flatness. This can be done by using a steel rule as a straight edge. The steel rule should be held on the table across the table slot close to the front edge of the table. *(See Fig. 12)*

If the straight edge shows there is a step across the table slot then the table needs to be adjusted using the two screws and locking nuts provided for this purpose, located on the underside of the rip fence guide, at (D) *Fig. 12*

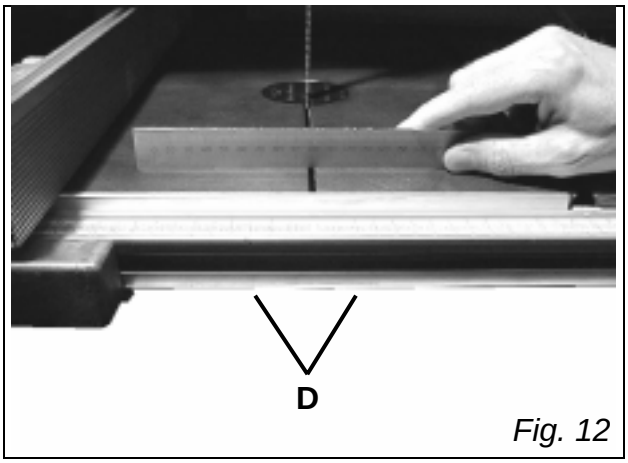

Fig. 12

3.11 Stability of the bandsaw

Before using the bandsaw, ensure the machines upright stability is satisfactory.

The bandsaw has four Ø8mm holes (A) *Fig. 13* in it's base to allow it to be bolted to the floor or a bench or alternatively to the optional workstand.

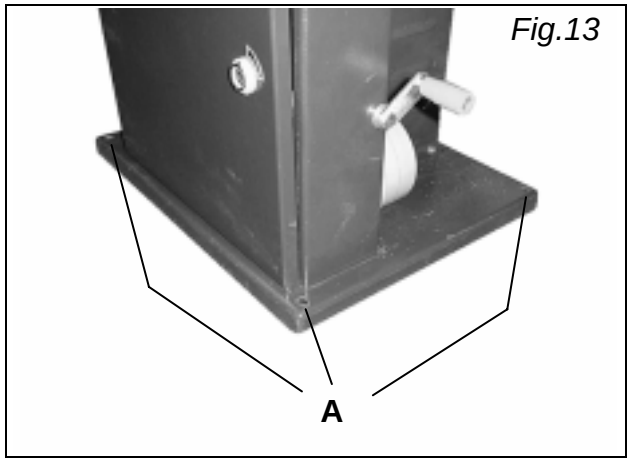

Fig.13

3.12 Dust extraction

The machine is fitted with a dust extraction port of Ø100mm (B) *Fig.14*

It is recommended that when in use, the machine is connected to a suitable dust extractor.

The dust extractor used should be able produce an air speed of approx. 20 m / sec across the extraction port area.

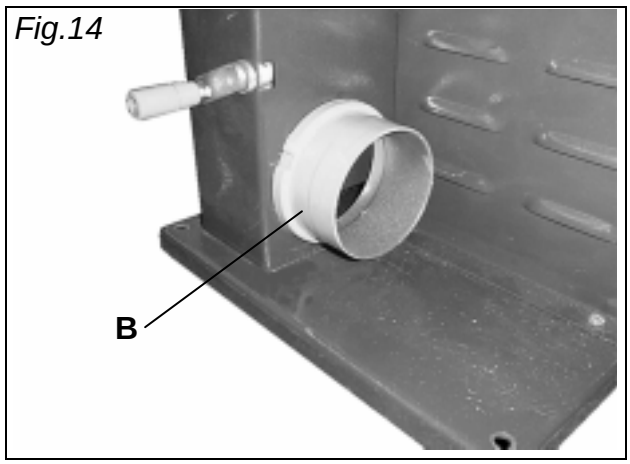

Fig.14

3.13 Lower blade guard

When open the lower bandwheel door on this machine the lower blade guard (C) *Fig. 15* swings down.

When the lower door is closed the guard MUST be raised back to its operating position.
The bandwheel doors MUST be closed at all times when the machine is being operated.

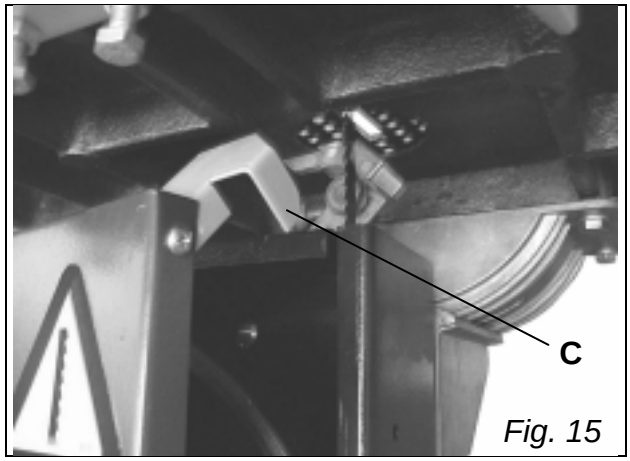

Fig. 15

3.14 Tilting the bandsaw table

To tilt the table to a specific angle.

Ensure the table is clear of loose objects.
Loosen the winged nut (D) *Fig. 16* on the lower trunion, then tilt the table to the angle required using the scale (E) *Fig. 16.*
When the required setting is reached re-tighten the winged nut to lock the table in position.

Note:- When using the table at an angle always have the rip fence on the lower side of the table to support the workpiece.

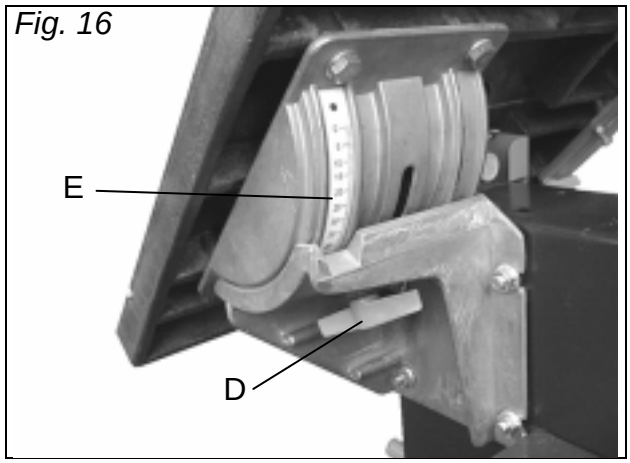

Fig. 16

3.15 Replacing the bandsaw blade

1. Isolate the machine from the supply by unplugging the 3 pin plug.

2. Open the top and bottom bandwheel doors by turning the door locks (A) with a flat bladed screwdriver.

3. Remove the Rip fence guide (B) from the front of the table by releasing the 4 winged screws (C).

4. Release the blade tension by turning the large knob (D).

5. Remove the sawblade (E) by feeding it through the slot in the table, upper blade guides and guard and the slot in the spine of the machine taking care not to cut yourself, wear gloves if necessary.

6. When fitting the new blade ensure the blade teeth are pointing downwards and towards you at the position where the blade passes through the table.

7. Re-tension the new blade and check the blade tracking by turning the upper wheel by hand. The blade should run in the centre of the bandwheel. (*See Fig. 19*)

8. If required adjust the tracking using tracking knob and lock knob (F) *Fig. 18* to the rear of the upper bandwheel housing. When the tracking is correct lock the setting.

9. Re-set the blade guides as described in the section headed “Adjusting the blade guides”

10. Replace the rip fence guide.

11. Close and lock both the bandwheel doors before re connecting the power supply.

Fig. 17

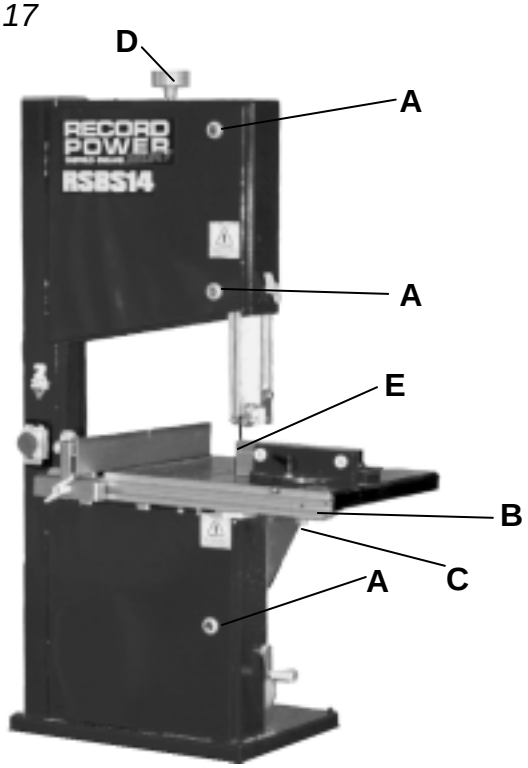

Fig. 18

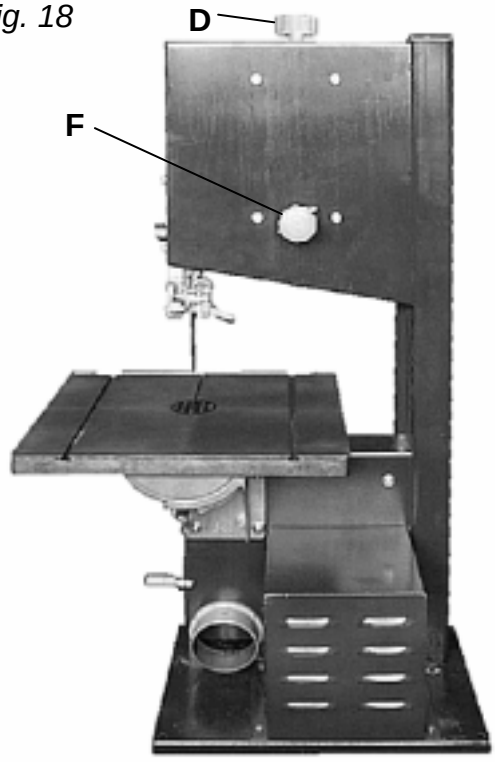

3.16 Tracking the Bandsaw blade

Isolate the machine from the supply by unplugging the mains plug.

Set the tracking of the blade before setting the blade guides.

Once the blade is fitted and tensioned, track the blade by turning the upper bandwheel by hand and adjusting the tracking knob (F) *Fig. 18.*

The blade should run in the centre of the bandwheel as shown in *Fig. 19*.

When the correct adjustment is achieved lock the tracking knob with the winged nut.

Fig. 19

3.17 Adjusting the Blade Guides

Upper Guides

To adjust the upper blade guides, first position the roller guides (A) *Fig.20* relative to the blade by slackening off the hex. nut (B) *Fig. 20* and moving the guide carrier until the roller guides (A) are approx. 2mm behind the gullets of the blade.

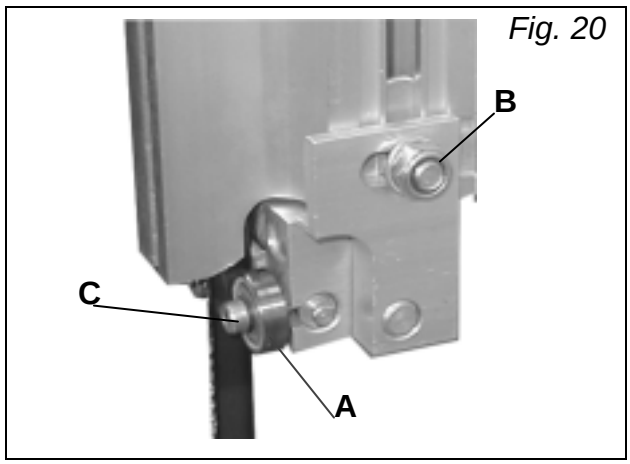

Fig. 20

Next set the roller guides (A) to within 0.5mm of the blade by releasing the screw (C) on each side of the blade. Do not set the guides too close as this will adversely affect the life of the blade.

Finally adjust the large thrust bearing (D) *Fig. 21* to be just clear of the back of the blade by unlocking the socket cap screw (E) *Fig. 21* . When the correct adjustment is reached lock in position with socket cap screw (E).

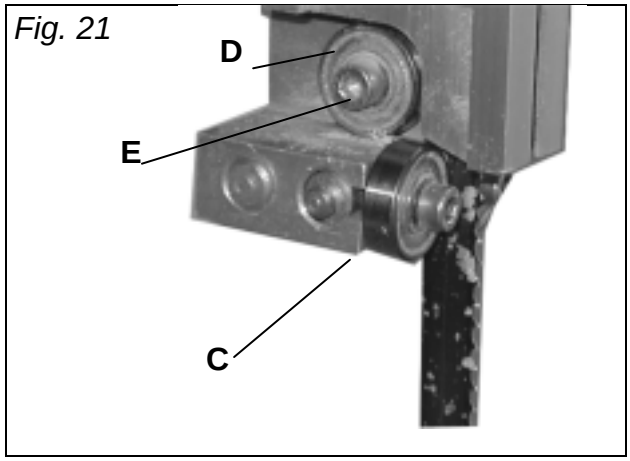

Fig. 21

Lower Guides

To adjust the lower blade guides (F) *Fig. 22* first position the guides so that they are approx. 2mm behind the gullets of the bandsaw blade by slackening off the nut (G) *Fig.22* then moving the guide carrier casting to the desired position. Re-tighten the nut (G) to lock in position.

Adjust the guides (F) to within 0.5mm of be blade by releasing the socket cap (H).

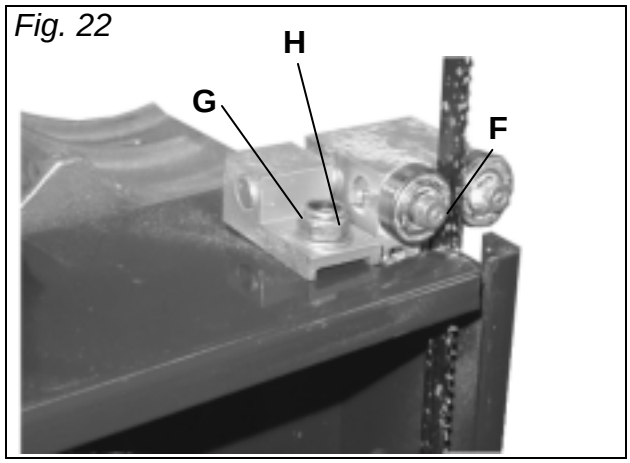

Fig. 22

3.18 Adjusting the Cutting Height

To adjust the cutting height release the winged nut (A) *Fig.23* and move the upper blade guide and guard assembly (B) *Fig. 23* so that it provides approx 2 - 3mm clearance above the workpiece.

When set correctly re-tighten winged nut (A).

Note: The maximum cutting height is 6” (150mm).

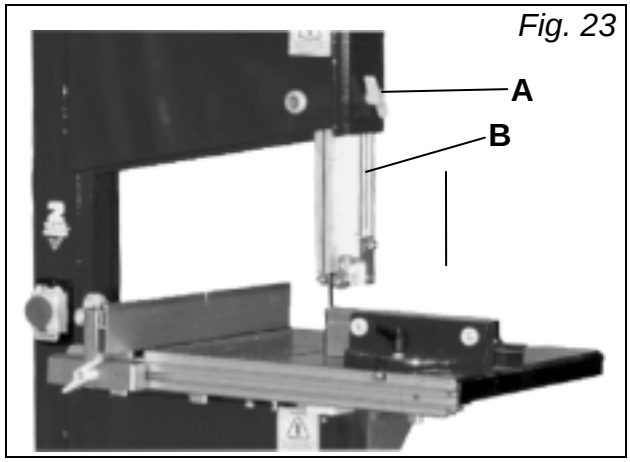

Fig. 23

3.19 Changing the Blade Speed

The RSBS14 has two blade speeds 440 m/min (*1445 feet/min*) for hardwoods, some plastics and certain non ferrous metals and 900 m/min (*2950 feet/min*) for all other timber.

The lower bandwheel (C) *Fig. 24* has two, integral, multi vee form pulleys and the motor shaft has a twin multi vee form pulley (D) *Fig. 24*.

The multi vee belt (E) *Fig. 24* passes around the bandwheel pulley, the motor pulley and the plain tension roller (F) *Fig. 24*. The belt tension is released and applied by using the cranked handle (G) *Fig. 24,* this moves the tension roller and allows the speed to be changed.

To change the belt the lower bandwheel must be removed.

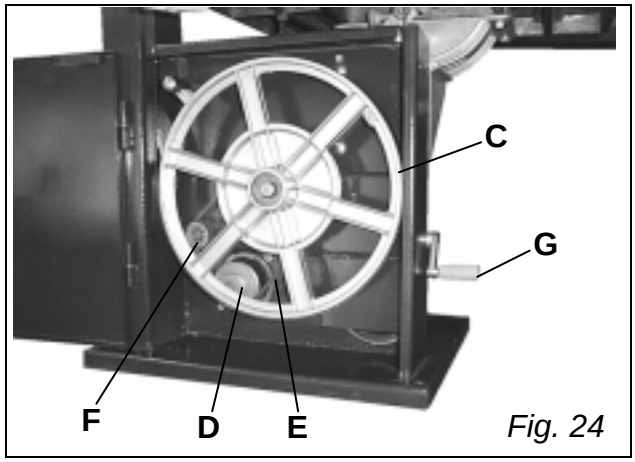

Fig. 24

High Speed 900 m/min

Before changing the speed always make sure the machine has been isolated from the mains supply .

For the high speed the belt should be fitted to the rear pulley on both the motor and bandwheel.
As shown in *Fig. 25.*

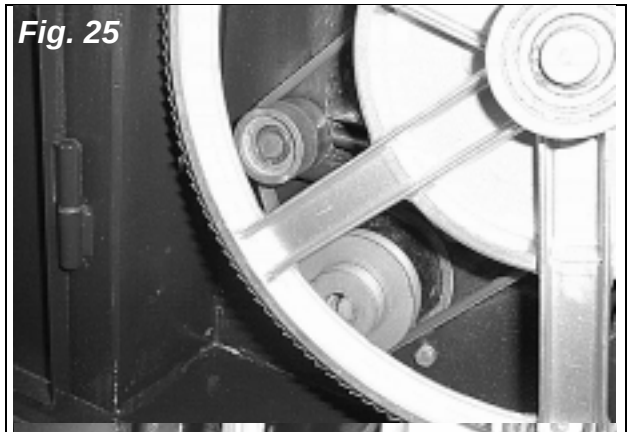
Fig. 25

Low Speed 440 m/min

Before changing the speed always make sure the machine has been isolated from the mains supply .

For the low speed the belt should be fitted to the front pulley on both the motor and bandwheel.
As shown in *Fig. 26.*

Fig. 26

4. OPERATION

1. The blade cuts on a continuous downstroke.

2. Slowly feed the workpiece towards the blade, putting only light pressure on it.

3. With both hands, firmly hold the workpiece down on the table, and feed it towards the blade slowly, using the push stick supplied, keeping your hands away from the blade.

4. For best results the blade must be sharp.

5. Select the right blade for the job, depending on the thickness of the wood and the cut to be made. The thinner and harder the wood, the finer the teeth of the blade. Use a fine tooth blade for cutting sharp curves.

6. Use the fence provided to feed the workpiece along the blade slowly and in a straight line.

7. The machine is especially suited for cutting curves, but will also make straight cuts.

8. When cutting, follow the design marked out by pushing and turning the workpiece evenly.

9. Do not attempt to turn the workpiece without pushing it, as this may cause the workpiece to get stuck, or the blade to bend.

5. MAINTENANCE

CAUTION! BEFORE CLEANING OR CARRYING OUT MAINTENANCE WORK, DISCONNECT THE MACHINE FROM THE POWER SOURCE (WALL SOCKET).
NEVER USE WATER OR OTHER LIQUIDS TO CLEAN THE MACHINE. USE A BRUSH.

REGULAR MAINTENANCE OF THE MACHINE WILL PREVENT UNNECESSARY PROBLEMS.

1. Keep the table clean to ensure accurate cutting.

2. Keep the outside of the machine clean to ensure accurate operation of all moving parts and prevent excessive wear.

3. Keep the ventilation slots of the motor clean to prevent it from overheating.

4. Keep the inside (near the saw blade, etc.) clean to prevent accumulation of dust.

6. TROUBLESHOOTING

WARNING: FOR YOUR OWN SAFETY, ALWAYS TURN OFF THE MACHINE AND UNPLUG BEFORE CARRYING OUT ANY TROUBLESHOOTING.

TROUBLE	PROBABLE CAUSE	REMEDY
The machine does not work when switched on.	1. No power supply.	- Check the cable for breakage. - Check the fuse.
	2. Defective switch.	- Return machine to your local dealer for repair.
The blade does not move with the motor running.	1. The blade tension knob has not been tightened.	- Switch off the motor, tighten the blade tension knob.
	2. The blade has come off one of the wheels.	- Open the hinged door and check.
	3. The saw blade has broken.	- Replace the blade.
	4. The drive belt has snapped.	- Replace the belt.
The blade does not cut in a straight line.	1. Fence for cutting not used.	- Use a fence.
	2. Too fast feed rate.	- Put light pressure on the workpiece. Make sure the blade does not bend.
	3. The blade teeth are dull or damaged.	- Try a new blade.
	4. Blade guides not suitably adjusted.	- Adjust the blade guides (see assembly instructions).
The blade does not cut, or cuts very slowly.	1. The teeth are dull, caused by cutting hard material or long use.	- Replace the blade, use a 6 T.P.I. blade for wood and soft materials. Use a 14 T.P.I. blade for harder materials. A 14 T.P.I. blade always cuts slower due to the finer teeth and the slower cutting performance.
	2. The blade was fitted the wrong way round.	- Fit the blade correctly.
Sawdust builds up inside the machine.	This is normal	- Clean the machine regularly. Open the hinged door and remove the sawdust with a vacuum cleaner.
Sawdust inside the motor housing.		- Clean the ventilating slots of the motor with a vacuum cleaner. From time to time remove the sawdust to prevent it from being sucked into the housing
The machine does not cut at 45° or 90° angles.	1. The table is not at right angles to the blade.	- Adjust the table.
	2. The blade is dull or too much pressure was put on the workpiece.	- Replace the blade or put less pressure on the workpiece.
The blade cannot be properly positioned on the pulley.	1. The wheels are not in alignment. Defective bearing.	- Return the machine to your local dealer for repair.
	2. The wheel alignment knob hasn't been properly adjusted.	- Adjust the knob (see instructions).
	3. Inferior blade.	- Replace the blade.

7. WIRING

7.1 WIRING INSTRUCTIONS

The machine is supplied with a plug fitted. Should this be changed by the customer, the wires in the mains lead are coloured in accordance with the following codes:-

Green and Yellow : Earth ⏚ Blue : Neutral Brown : Live

WARNING! This appliance must be earthed.

The green and yellow coloured wire must be connected to the terminal that is marked with the letter ‘E’ or by the earth symbol ⏚

The blue coloured wire must be connected to the terminal that is marked with the letter ‘N’

The brown coloured wire must be connected to the terminal that is marked with the letter ‘L’

REPLACING POWER SUPPLY CABLE
Replacement of the power supply cable should only be done by a qualified electrician.

7.2 WIRING DIAGRAM

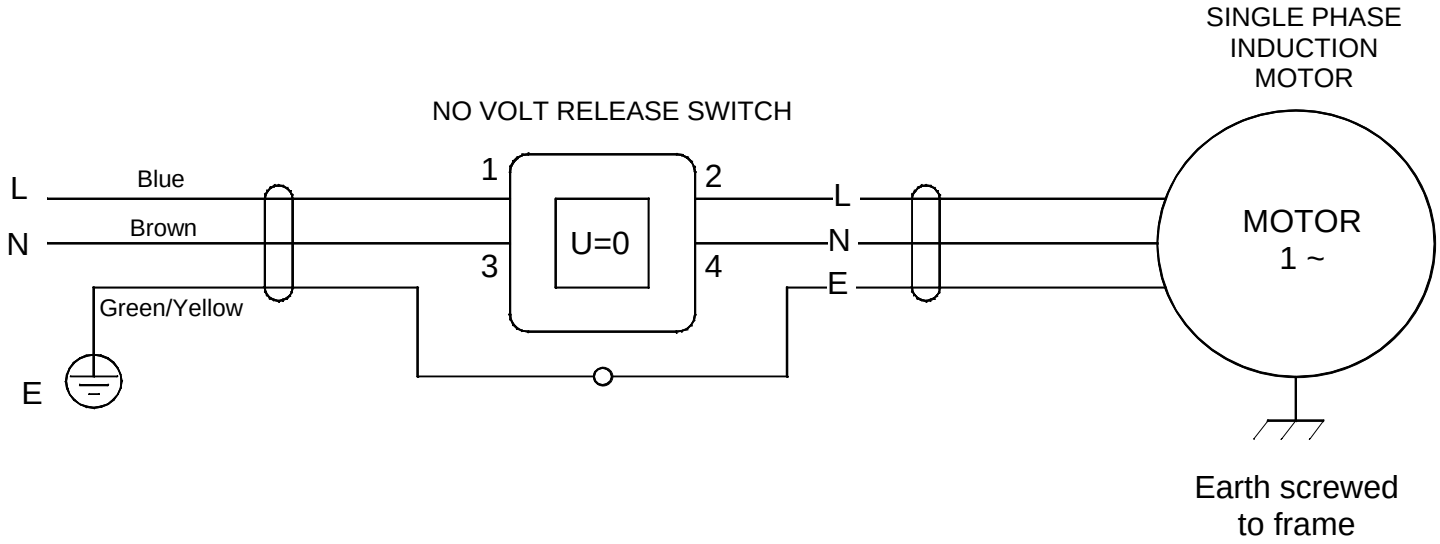

8. PART LIST

REF. No.	DESCRIPTION	REF. No.	DESCRIPTION
1	Circlip ring 17x1	64	Bearing mount cylinder
2	Bearing	65	Flange nut M8 galvanised
3	Upper band saw wheel assembly	69	Door-lower assembly
4	Upper bearing shaft	70	Hexagonal nut M4, self-locking
5	Wheel carrier bracket	71	Flat washer 4 mm
6	Spring washer M16	72	Saw blade guard
7	Hexagonal nut -M16x1.5	73	Hexagonal screw -M4x12
8	Special Screw for tension	74	No-volt switch
9	Starlock w/o cap Rd10	75	Carriage bolt M8x100
10	Cylindrical pin 11x100	76	Brush
11	Tension bracket	77	Spacer bush 8x50
12	Sloted inset	78	Lower band saw wheel assembly
13	Saddle washer	79	Grooved ball bearing 80101
14	Lock housing	80	Tension wheel
15	Nylon washer	81	Circlip ring 12x1
16	Hexagonal nut M22x1.5	83	Sliding shaft
17	Tongue lock	85	Hexagonal nut -M20x1.5
18	Serrated lock washer 6mm	86	Lower bearing shaft
19	Hexagonal bolt -M6x10	87	Poly-v-belt
20	Leaf spring	88	Motor belt pulley
21	Door-upper assembly	90	Hexagonal screw -M6x16 galvanised
23	Lamello plug	91	Spring washer 6 mm
24	Blade tension knob	92	Set collar 10 mm
25	Blade tensioner	94	Disk washer 20x10.2x0.8
26	Flat washer 8 mm	95	Crank
27	Hexagonal head screw M8x16	96	Suction connector Rd 100
28	Blade tracking knob	100	Hexagonal flat nut-M6 galvanised
29	Wing nut M8	101	Crank handle
31	Tension bracket frame	102	Cap screw M6x55
32	Flange nut M8 galvanised	103	Motor 1 Kw 220/240V1~
33	Frame-Bandsaw	104	Pin guide set
35	Pan head taping screw 4.2x16	105	Lower guide support
36	Serrated lock washer 5 mm	109	Rip fence carrier
37	Plate	112	Knurled thumb screw M6x25 galvanised
38	Carriage bolt M8x20	113	Knurled nut M6
39	Bolt guide	114	Washer flat 6 mm
40	Hexagonal bolt -M6x20	115	Carriage bolt M6x40
42	Guide bracket	116	Fence extrusion
43	Serated lock washer 6 mm	117	Bolt guide
44	Hexagonal nut M6	118	Carriage bolt M8x50
45	Saw blade guide assembly	119	Table
46	Slide	120	Table insert
48	Guide adjust screw	123	Scale-metric
49	Grooved ball bearing 80018	124	Rip fence carrier extrusion
50	Flat washer 6 mm	125	Hexagonal nut M6
51	3-roller guide ass'y	130	Wing nut M8
53	Bolt guide, small	134	Glide piece
54	Screw socket set M6x12	135	Table trunion upper
55	Guide shaft	136	Serrated lock washer 8 mm
56	Upper guide mount	137	Hexagonal screw M8x20
57	Flat washer 8 mm	140	Table trunion lower
58	Hexagonal nut M8, self locking	200	Band saw tyre 350x2.5x20
60	Bearing mount cylinder w/cap		

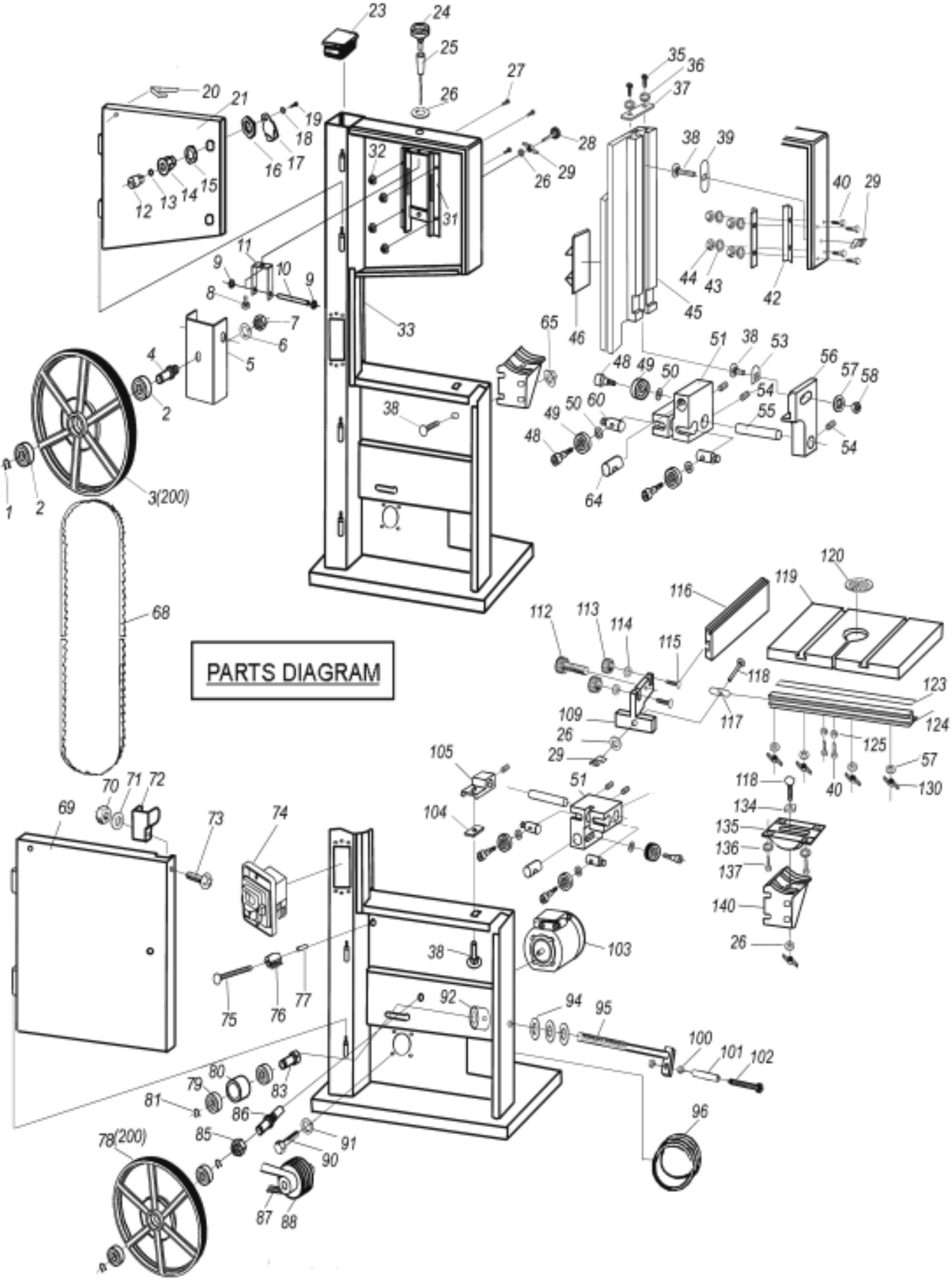
PARTS DIAGRAM