AUTHORISED SERVICE AGENTS:

CARBA-TEC Pty. Ltd.
40 Harries Road
Coorparoo, QLD 4151
Ph: (07) 3397 2577
Fax: (07) 3397 2785

CARBA-TEC (NSW) Pty. Ltd.
32 Percy Street
Auburn, NSW 2144
Ph: (02) 9649 5077
Fax: (02) 9649 7044

CARBA-TEC (CANBERRA) Pty. Ltd.
6/145 Gladstone Street
Fyshwick, ACT 2609
Ph: (02) 6280 0620
Fax: (02) 6280 0630

CARBA-TEC (MELB) Pty. Ltd.
80 - 82 Osborne Avenue
Springvale, VIC 3171
Ph: (03) 9558 4200
Fax: (03) 9558 5133

CARBA-TEC (WA)
151 Balcatta Road
Balcatta, WA 6021
Ph: (08) 9345 4522
Fax: (08) 9240 1014

CARBA-TEC NZ Ltd.
110 Harris Road
East Tamaki, Auckland
Ph: (09) 274 9454
Fax: (09) 274 9455

www.carbatec.com.au

14" BANDSAW

MODEL CTJ-3501

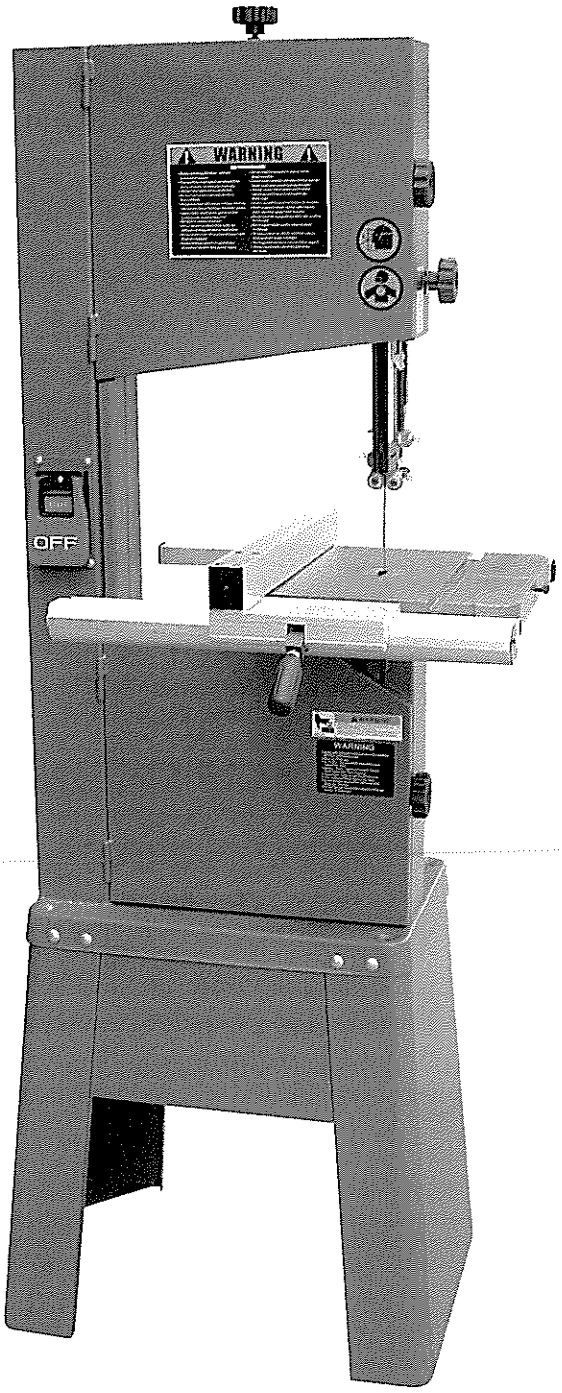

INSTRUCTION MANUAL

CARBA-TEC®

TOOLS FOR WOOD

WHEN USING THIS MACHINE, ALL OCCUPATIONAL HEALTH AND SAFETY REQUIREMENTS ARE TO BE OBSERVED.

SAFETY WARNING

This list of do's and don'ts is not exhaustive and is not a substitute for common sense and best practices.

Woodworking machines are potentially dangerous. It is important to observe all safety instructions while operating this machine.

- Always wear eye and ear protection.
- Always unplug the machine from the power source before making any adjustments or changing blades.
- Always use a licensed electrician for any installation and repair work.
- Do not wear loose clothing, jewellery or other loose ornamentation.
- Long hair should be protected by netting or other means to prevent ingress into the machines working parts.
- Keep all safety guards in place and well maintained.
- Ensure all adjusting keys, spanners and tools are removed before machine is switched on.
- Keep children and all unauthorized persons away from machines even when not in use.
- Do not use machine for any other purpose other than that for which it was designed.
- Do not use excessive force, or exceed the capacity of the machine by attempting to take too large a cut.
- At no time should machine be unattended whilst in operation.
- Do not put hands inside machine whilst it is running.
- Wood dust is a health hazard, ensure correct dust extraction is fitted.
- Cutter blades should be kept sharp at all times. Blunt blades are a major cause of accidents. Damage to machines caused by blunt blades is not covered by warranty.
- This machine should be used in an area with good lighting and ventilation.
- Keep the floor and adjacent areas around the machine dry and clean.
- Always maintain a balanced stance when operating this machine.
- Do not operate this machine whilst on medication or under the influence of alcohol.

SAFETY RULES FOR BANDSAWS

- Leave about 4mm clearance between material and upper blade guide.
- Do not remove scrap pieces from table whilst machine is running
- Always use correct blade size and type for the task being done.
- Check that blade tension and tracking are properly set.
- Make sure stock being resawn has a flat bottom and will not roll.
- Do not feed material too quickly.
- Before reversing blade out of a cut, turn machine off.

ASSEMBLY

• When you receive your new bandsaw, the stand will not be assembled. Use the carriage bolts and nuts (M8 x 16), Flat washes (M6 x 13) and hex head bolts (M6 x 16). Make sure after assembly the stand is sitting square and flat on the floor.

• Lift the saw body onto the base, as it is heavy, you will need the help of a second person.

• Fix into place with remaining nuts and bolts.

• To mount table, you will need to remove the table pin and the insert. Slide the blade through the blade slot and turn the table around so the mitre slot is positioned to the outside of the machine.

• Fit the trunnions onto the support bracket and screw the lock knobs onto the 2 two Hex head bolts that run through the bracket. Fig.3 A and B.

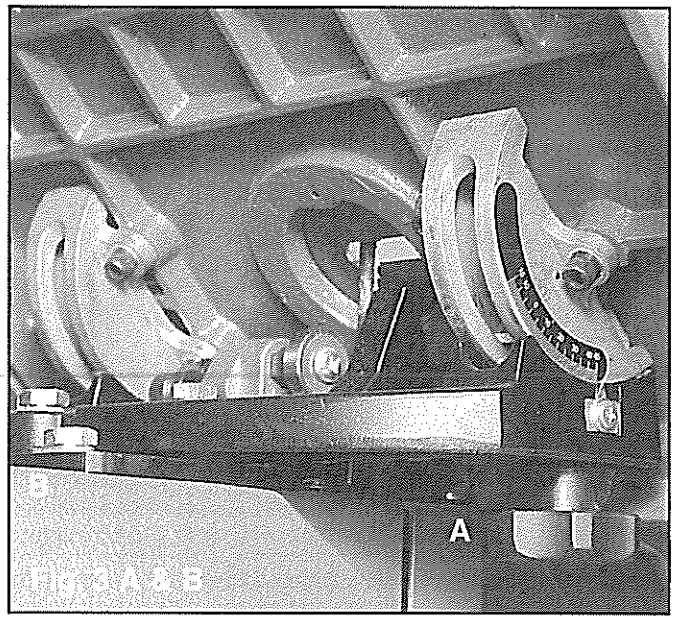

Fig. 3 A & B

RIP FENCE (Fig.5)

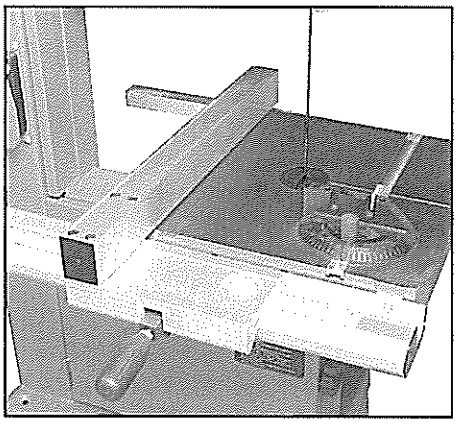

• Bolt the fixed rail of the fence (The one with the scale), to the front of the cast table using 2 hex head bolts (M6 x 20) and 2 M6 spring washers.

• The square tube that the end of the fence runs on is bolted to the back of the cast iron table.

• Set the fence assembly onto the fixed rail, slide on its guides to ensure smooth movement.

• To lock in position push down locking handle.

TILTING THE TABLE

MAKE SURE THE MACHINE IS NOT CONNECTED TO Its POWER SOURCE.

Table will tilt up to 45 degrees to the right and 10 degrees to the left.

• Loosen the 2 lock knobs Fig. 3 A and B tilt table to desired angle and retighten knobs.

• Please note that to tilt table to the left you will need to remove hex head bolt. Fig 4. A

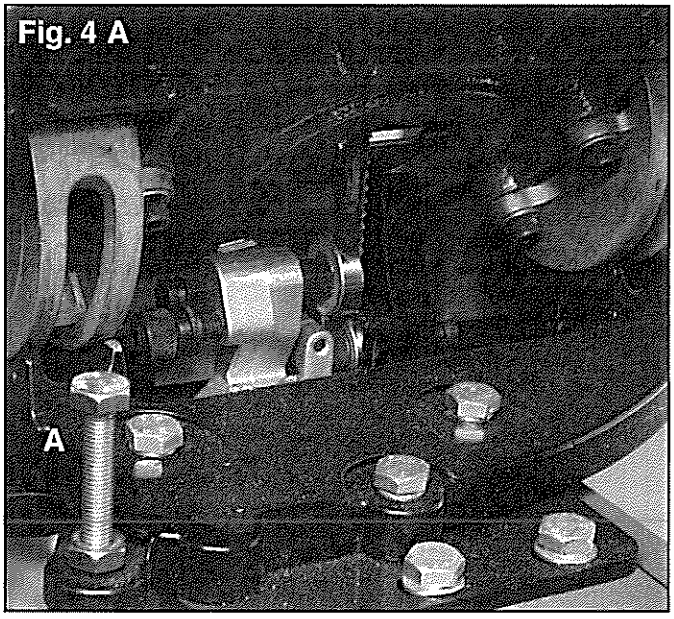

Fig. 4 A

ADJUSTING THE TABLE STOP TO 90 DEGREES

• Loosen the 2 lock knobs Fig 3 A and B. Tilt table until it hits the table stop bolt. Fig. 4 . Hold a square against the blade to check if it is square to the table Fig. 1, if it isn't, loosen the lock knobs and raise or lower the stop bolt until the table is square to the blade. Don't forget to re-tighten the lock knobs.

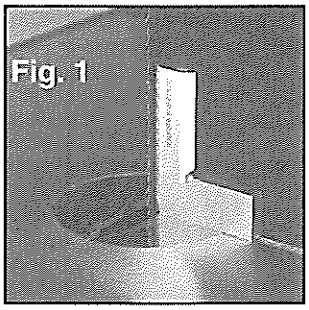
Fig. 1

• You may need to reset the pointer to zero. Fig.2

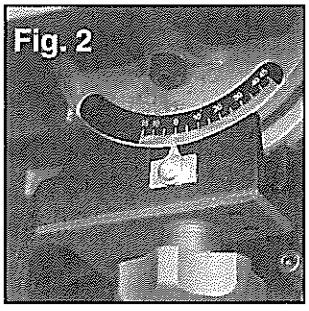
Fig. 2

CHANGING THE BLADES

• Disconnect machine from power source.

• Remove the table pin and insert.

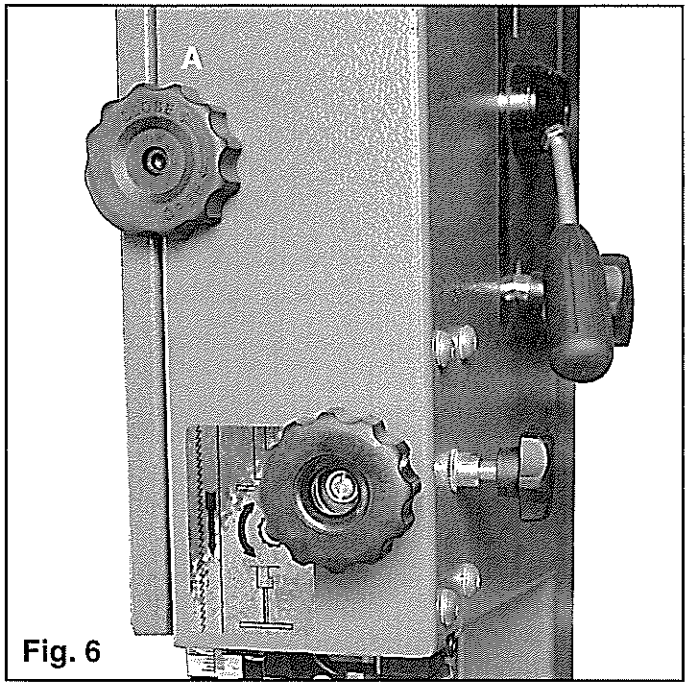

Fig. 6

• Open the wheel covers top and bottom, by turning side knobs Fig.6 A.

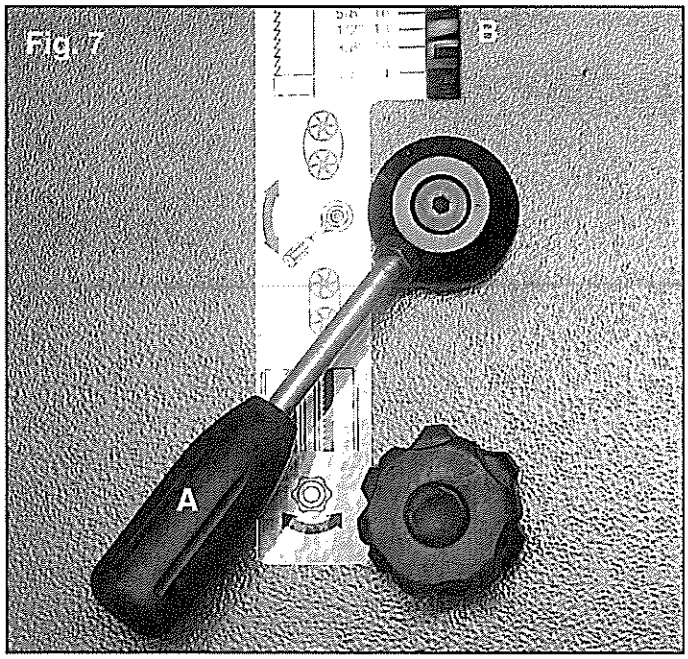

Fig. 7

• Loosen the lever on the rear of bandsaw by pushing it up. Fig 7. A This will release the blade tension.

• Remove blade from wheels and direct it through the side slot in the table. Remember a blade is still a sharp object and can be dangerous when handling.

• Feed new blade through table slot and put into position into upper and lower ball bearing system and over the wheels. Teeth should be facing front and angling down.

• Re-tension the blade by pushing lever Fig 7 A down.

• Replace the table pin and insert.

BLADE TENSION

• If the blade tension is not correct you will need to adjust the blade tension hand wheel. Fig.8 A. There is an indicator that gives you the correct tension for the width of the blade. Fig. 7B.

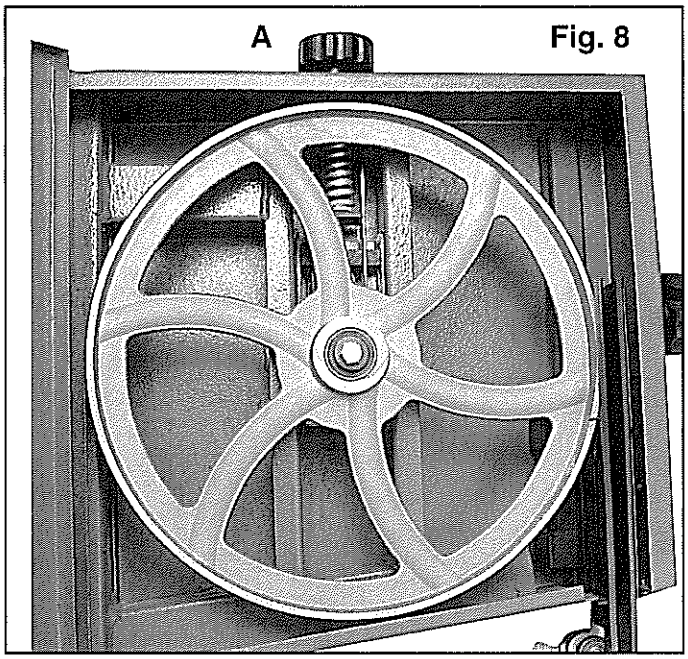

Fig. 8

UPPER BLADE GUIDE SETTING

• The bearings for the upper and lower guide assembly should be .5mm from the sides of the blade. There is also a micro adjustment at the rear of the guides to move them forward or back. Fig. 9 A. Make sure the guide bearings are set back from the blade teeth.

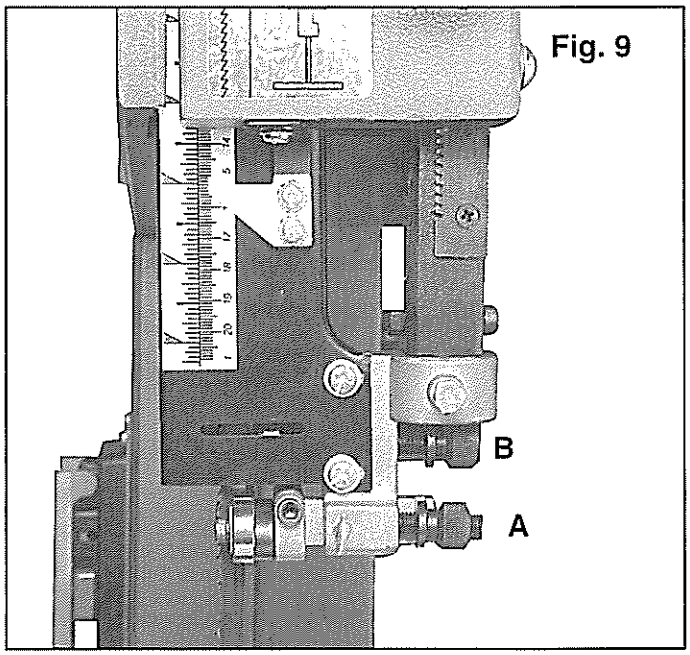

Fig. 9

• Do not have the blade traveling on the rear roller it needs to sit forward and only touch it when the bandsaw is in use. If the blade is in constant contact with the roller it may overheat. Adjustment is made via micro adjusting knob. Fig. 9B.

DUST COLLECTION

This bandsaw is equipped with a 4" dust port Fig.10 Carba-Tec strongly recommends this machine should be used with an appropriate dust extractor.

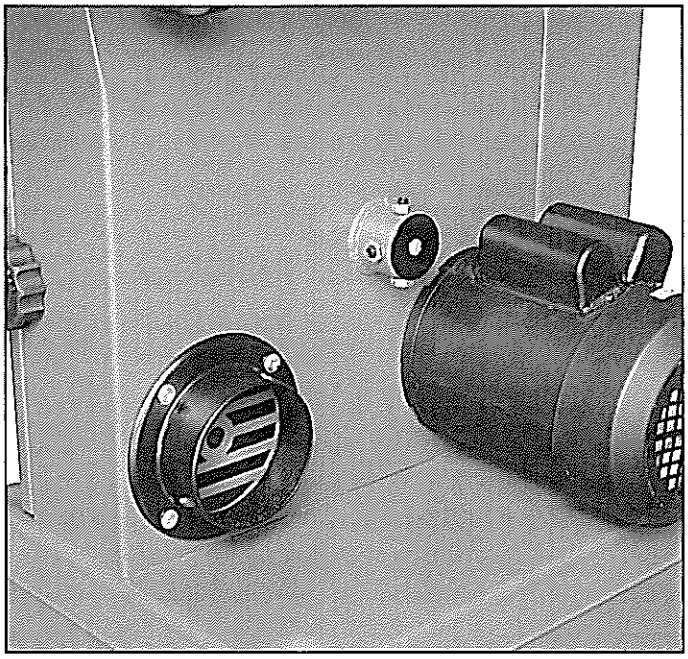

Fig. 10

BLADE GUIDE HEIGHT

The upper blade guide should have as little clearance as possible from the material. It is adjusted by loosening the locking knob Fig.11A and raising or lowering the guide via the rack and pinion knob Fig. 11B to the correct height. Don't forget to re-tighten the locking knob when you have your setting.

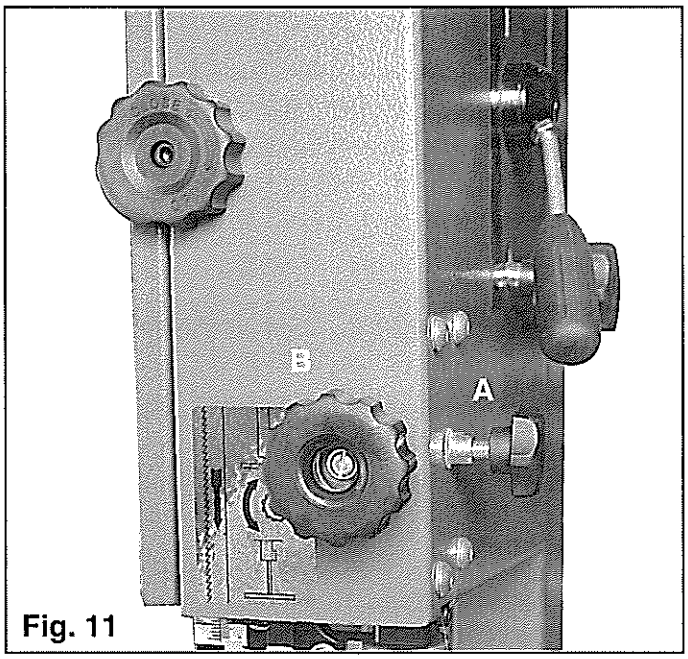

Fig. 11

1
2
3
4
5
6
7
8
9
10
11
12
13
14
15
16
17
18
19
20
21
22
23
24
25
26
27
28
29
30
31
32
33
34
35
36
37
38
39
40
41
42
43
44
45
46
47
48
49
50
51
52
53
54
55
56
57
58
59
60
61
62
63
64
65
66
67
68
69
70
71
72
73
74
75
76
77
78
79
80
81
82
83
84
85
86
87
88
89
90
91
92
93
94
95
96
97
98
99
100
101
102
103
104
105
106
107
108
109
110
111
112
113
114
115
116
117
118
119
120
121
122
123
124
125
126
127
128
129
130
131
132
133
134
135
136
137
138
139
140
141
142
143
144
145
146
147
148
149
150
151

14" BAND SAW BODY PARTS LIST

REF.NO	#DWG.	DESCRIPTION	Q'TY
1	1001	BODY	1
2	1002	GUIDE BAR UP/DOWN LABEL	1
3	1003	MODEL NO. LABEL	1
4	1004	SAW BLADE TENSION LABEL	1
5	1005	KNOB	2
6	GB70	M6X20 HEX SOC CAP SCR	2
7	GB889	M6 NYLON NUT	2
8		M8 PULL NUT	1
9	1006	GUIDE BAR LOCK KNOB	1
10	1007	UPPER DOOR	1
11	GB70	M6X10 HEX SOC CAP SCR	1
12	1008	WARNING LABEL A	1
13	1009	ANTI-DUST LABEL	1
14	1010	NAMEPLATE	1
15	1011	DOWN DOOR	1
16	GB70	M6X10 HEX SOC CAP SCR	1
17	1012	WARNING LABEL B	
18	1013	WARNING LABEL C	
19	1014	CAM	1
20	GB70	M5X12 HEX SOC CAP SCR	1
21	1015	BIAS SHAFT	1
22	1016	BIAS SHAFT CLAMP SEAT	1
23	GB70	M6X12 HEX SOC CAP SCR	4
24	GB859	6MM SPRING WASHER	4
25	1017	ADJUST SHOES	1
26	GB819	M8X20 HEX SOC COUNTERSUNK SCR	1
27	1018	ADJUST HANDLE	1
28	GB6170	M8 HEX NUT	1
29	1019	UPPER SUPPORT BRACKET	1
30	GB	M8X20 HEX SOC PAN HD SCR	4
31	GB859	8MM SPRING WASHER	4
32	1020	ADJUST PIECE	1
33	GB80	M6X6 HEX SOC SET SCR	2
34	1021	SPRING PIECE	1
35	GB819	M4X8 CROSS HD COUNTERSUNK SCR	2
36	1022	ADJUST GEAR	1
37	1023	BUSHING	1
38	1024	GEAR FIXED PLATE	1
39	GB70	M6X12 HEX SOC CAP SCR	2
40	GB859	6MM SPRING WASHER	2
41	1025	GUIDE SHAFT COVER PLATE	2
42	GB819	M4X8 CROSS HD COUNTERSUNK SCR	4
43	1026	GUIDE SHAFT	1
44	1027	GUIDE SHAFT CONNECT ROD	1
45	GB70	M6X30 HEX SOC CAP SCR	1
46	GB6170	M6 HEX NUT	1
47	1028	GEAR ROW	1
48	GB819	M4X8 CROSS HD COUNTERSUNK SCR	3
49	1029	ADJUST KNOB	2
50	GB9074.1	M6X10 CROSS PAN HD SCR W/FT WASHER	2

REF.NO	#DWG.	DESCRIPTION	Q'TY
51	1030	UPPER SUPPORT BRACKET POST	1
52	GB5783	M6X20 HEX BOLT	1
53	1031	SPACER SLEEVE	2
54	80100	DOUBLE END SEALED BALL BEARING	2
55	GB9074.1	M6X8 CROSS PAN HD SCR W/FT WASHER	1
56	1032	THUMB SCR	4
57	1033	ADJUST NUT	4
58	GB80	M8X40 HEX SOC SET SCREW	4
59	1034	SUPPORT BRACKET	2
60	GB70	M5X40 HEX SOC CAP SCR	2
61	GB859	5MM SPRING WASHER	2
62	1035	BIAS SHAFT	4
63	80018	DOUBLE END SEALED BALL BEARING	4
64	GB70	M5X10 HEX SOC CAP SCR	2
65	GB96	5MM FLAT WASHER	2
67	1036	SAW BLADE COVER	1
68	GB9074.1	M6X8 CROSS PAN HD SCR W/FT WASHER	2
70	1037	GUIDE SHAFT SCALE	1
71	1038	FREE BOARD	1
72	1039	PLASTIC FLAT WASHER	1
73	1040	STEP SCR	1
74	1041	POINTER FIXED PLATE	1
75	GB9074.1	M5X6 CROSS PAN HD SCR W/FT WASHER	3
76	1042	POINTER	1
77	1043	LEFT COVER	1
78	1044	RIGHT COVER	1
79	GB9074.1	M5X8 CROSS PAN HD SCR W/FT WASHER	4
80	1045	FIXED PLATE	1
81	GB5783	M8X20 HEX BOLT	3
82	GB859	8MM SPRING WASHER	3
83	GB97.2	8MM FLAT WASHER	3
84	1046	PIN	2
85	GB80	M8X20 HEX SOC SET SCR	3
86	1047	LOW SUPPORT BRACKET POST	1
87	GB5783	M6X16 HEX FLANGE SCR	2
88	GB96	6MM FLAT WASHER	2
89	GB70	M5X40 HEX SOC CAP SCR	2
90	GB6170	M5 HEX NUT	2
91	GB96	5MM FLAT WASHER	2
92	1048	TUNNION SUPPORT BRACKET	1
93	GB5783	M8X30 HEX BOLT	3
94	GB859	8MM SPRING WASHER	3
95	GB5783	M8X80 HEX BOLT	1
96	GB6170	M8 HEX NUT	1
97	1049	SCALE POINTER	1
98	GB9074.1	M5X8 CROSS PAN HD SCR W/FT WASHER	1
99	1050	FIXED RING	1
100	GB80	M5X5 HEX SOC SET SCR	1
101	1051	ADJUST SHAFT	1
102	1052	SHAFT SEAT	1
103	1053	SPRING	1

REF.NO	#DWG.	DESCRIPTION	Q'TY
104	1054	BLADE TENSION POINTER	1
105	1055	FREE SQURE PLATE	1
106	1056	BLADE ADJUST KNOB	1
107	1057	HANDLE LOCK KNOB	1
108	1058	UPPER WHEEL ADJUST FRAME	1
109		M8 PULL NUT	1
110	1059	SQURE SHAFT	1
111	1060	REVOLVING SPINDLE	1
112	GB70	M8X20 HEX SOC CAP SCR	4
113	GB859	8MM SPRING WASHER	4
114		FLAT WASHER	4
115	1061	UPPER WHEEL JUMP SEAT	1
116	GB879	5X35 SPRING PIN	3
117	1062	UPPER WHEEL SHAFT	1
118	GB7246	15 WAVE WASHER	2
119	1063	UPPER WHEEL	1
120	6202Z	DOUBLE END SEALED BALL BEARING	4
121	GB893.1	35MM RETAINING RING	4
122	GB5783	M8X16 HEX HD BOLT	2
123	GB859	8MM SPRING WASHER	2
124		FLAT WASHER	2
125	1064	WHEEL TIRE	2
126	1065	SAW BLADE	1
127	1066	LOWER WHEEL	1
128	GB	V BELT	1
129	GB6171	M18X1.5 HEX NUT	1
130	GB856	18MM SPRING WASHER	1
131	1067	LOWER WHEEL SHAFT	1
132	GB80	M8X20 HEX SOC SET SCR	4
133	GB6170	M8 HEX NUT	4
134	1068	LOWER WHEEL SHAFT COVER	1
135	GB9074.1	M5X8 CROSS PAN HD SCR W/FT WASHER	1
136	1069	BRUSH	1
137	GB9074.1	M5X8 CROSS PAN HD SCR W/FT WASHER	1
138	1070	MOTOR W/SWITCH	1
139	GB1096	5X30 KEY	
140	GB70	M8X20 HEX SOC CAP SCR	2
141		FLAT WASHER	2
142	GB859	8MM SPRING WASHER	2
143	1071	MOTOR PULLEY	1
144	GB80	M6X8 HEX SOC SET SCR	1
145	1072	DUST OUTLET	1
146	GB9074.1	M6X8 CROSS PAN HD SCR W/FT WASHER	4
147	GB9074.1	M5X8 CROSS PAN HD SCR W/FT WASHER	4
148		SWITCH ASS'Y	1
149		STRAIN RELIEF 6N-4	2
150	GB9074.1	M5X8 CROSS PAN HD SCR W/FT WASHER	2
151		CORD FIXED PLATE	1

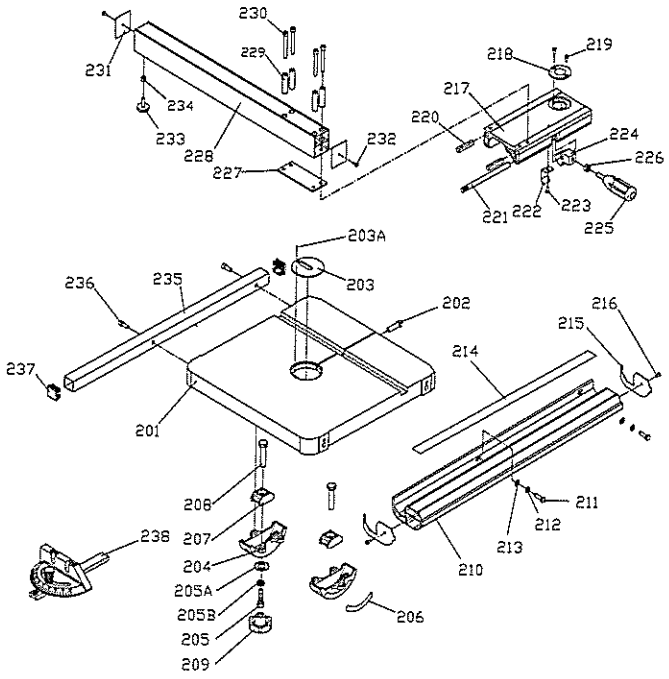

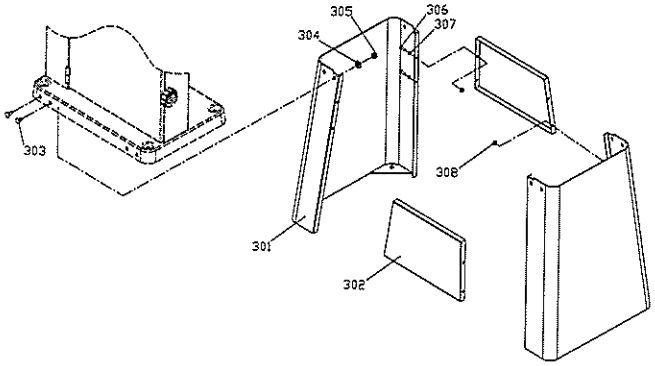

14" BAND SAW STAND PARTS LIST

REF.NO	#DWG.	DESCRIPTION	Q'TY
301	3001	STAND	2
302	3002	SIDE PANEL	2
303	□190	STAND CARRIAGE BOLT	8
304	▯190	FLAT WASHER	8
305	□190	NUT	8
306	GB5783	M6X16 HEX HD BOLT	8
307	GB97.2	6MM FLAT WASHER	8
308	GB6177	M6 HEX FLANAGE NUT	8

14" BAND SAW TABLE PARTS LIST

REF.NO	#DWG.	DESCRIPTION	Q'TY
201	2001	TABLE	1
202	2002	TABLE PIN	1
203	2003	TABLE INSERT	1
203A	GB879	3X10 SPRING PIN	1
204	2004	TRUNNION	2
205	GB70	M6X16 HEX SOC CAP SCR	6
205A		FLAT WASHER	6
205B	GB859	6MM SPRING WASHER	6
206	2005	SCALE	1
207	2006	TRUNNION CLAMP SHOES	2
208	GB5783	M10X50 HEX HD BOLT	2
209	2007	TABLE FIXED KNOB	2
210	2008	CLAMP FRAME	1
211	GB5783	M6X20 HEX HD BOLT	2
212	GB859	6MM SPRING WASHER	2
213		FLAT WASHER	2
214	2009	STRAIGHT RULER	1
215	2010	END COVER	2
216	GB845	ST3.5X8 CROSS PAN HD SELF TAPING SCR	2
217	2011	ADJUST BASE	1
218	2012	CONVEX	1
219	GB9074.1	M4X6 CROSS PAN HD SCR W/FLAT	2
220	2013	FIXED SHAFT	2
221	2014	FIXED SPINDLE	1
222	2015	FIXED LUMP	1
223	GB9074.1	M4X10 CROSS PAN HD SCR W/FLAT	1
224	2016	LOCK CAM	1
225	2017	LOCK HANDLE	1
226	GB6170	M8 HEX NUT	1
227	2018	LINER PLATE	1
228	2019	SUPPORT TUBE	1
229	2020	SPACER BUSHING	4
230	GB70	M6X60 HEX SOC CAP SCR	4
231	2021	SUPPORT TUBE END COVER	2
232	GB845	ST3.5X8 CROSS PAN HD SELF TAPING SCR	2
233	2022	ADJUST SCR	1
234	GB6170	M6 HEX NUT	1
235	2023	SQUARE TUBE	1
236	GB70	M6X16 HEX SOC CAP SCR	2
237	2024	SQUARE TUBE END COVER	2
238		MITER GAUGE	1
238A	2025	MITERGAUGE BODY	1
238B	2026	MITER GAUGE GUIDE BAR	1
238C	2027	MITER GAUGE FIXED HANDLE	1
238D	2028	HANDLE WASHER	1
238E	2029	POINTER	1
238F	GB818	M5X6 CROSS PAN HD SCR	1

NOTES